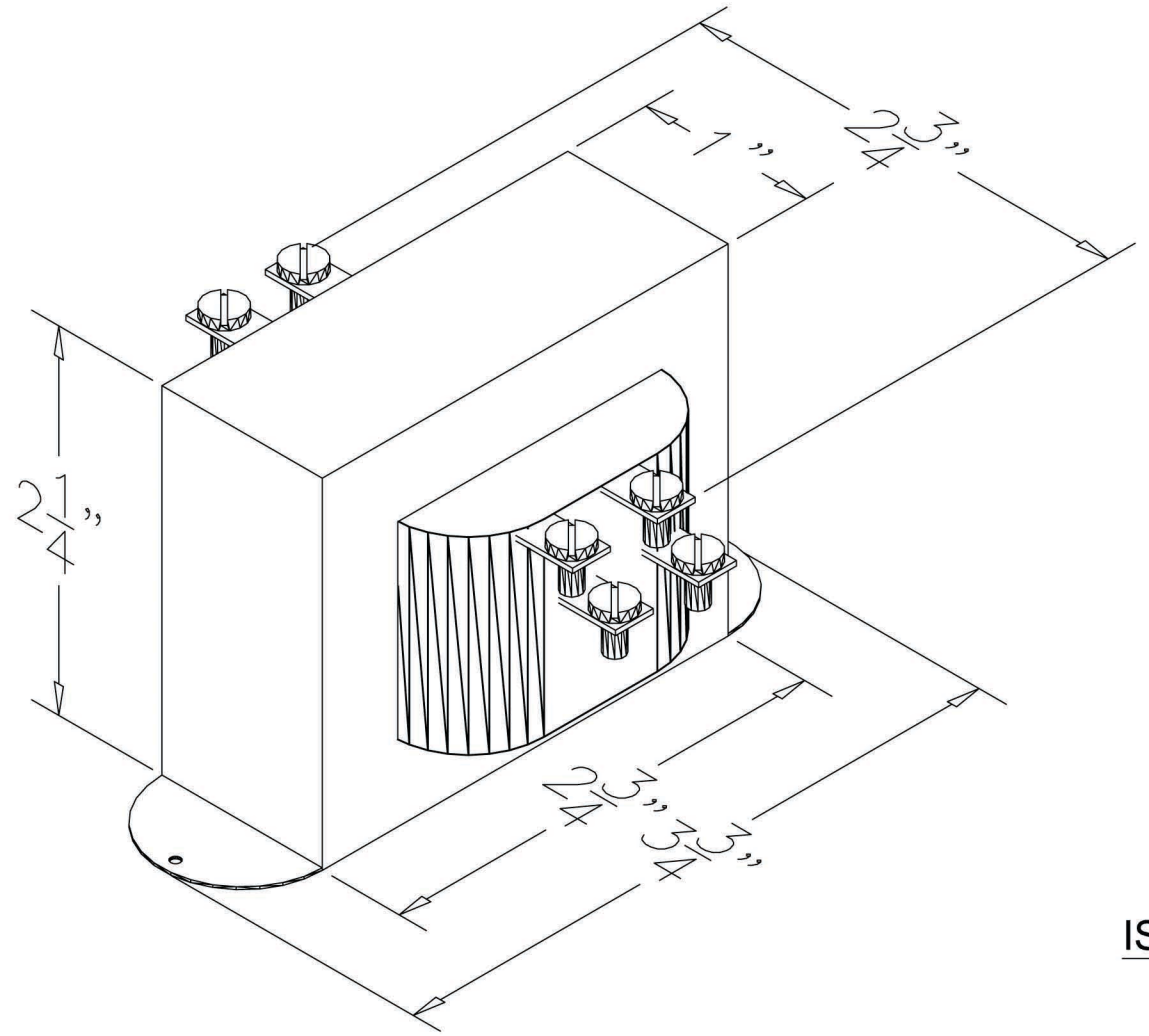

P: 120V/208V/240V
S: 24V/12V
V: 50/60Hz
V: 20VA

ISOMETRIC VIEW

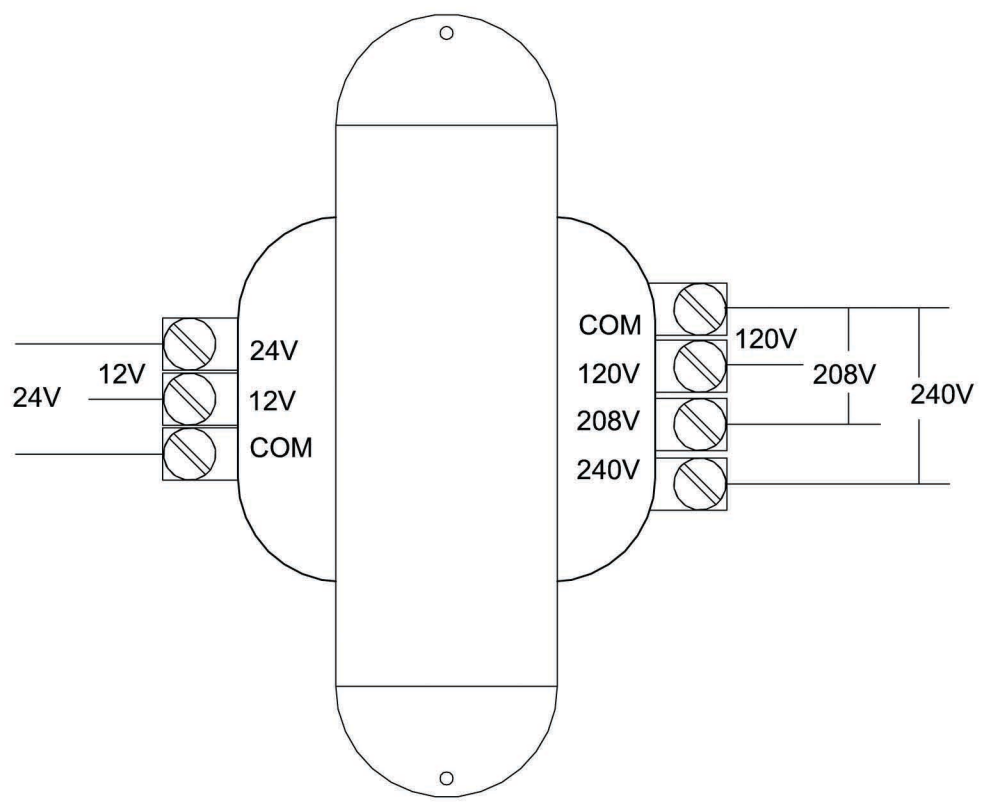

TOP VIEW

TRANSFORMER 120/208/240 to 24VCT 20VA OPEN TYPE,
50/60Hz SCREW TERM

DATE	DESCRIPTION	REV.
		08
		07
		06
		05
		04
--	-----	03
--	-----	02
--	-----	01
--	-----	00

SYSTEM :

REFRIGERATION

AUTOMATION / CONTROL :

MICRO THERMO
TECHNOLOGIES
2584 boul. Le Corbusier
Laval, Quebec
Canada, H7S 2K8
Tel: (450) 668-3033
Fax: (450) 668-2695
e-mail : mt@microthermo.com

TITLE: TRANSFORMER 120/208/240 TO 24VCT 20VA OPEN TYPE 50/60Hz SCREW TERMINAL

PART# 560-0027

DRAWN BY :	DESIGN BY :	APPROVED BY:	PROJECT NO :
G.Q.	L.M.	A.H.	STANDARD
SCALE : N.T.S	DATE : 08-25-2004	SHEET NO : T-008	FILE NAME: XFO-560-0027