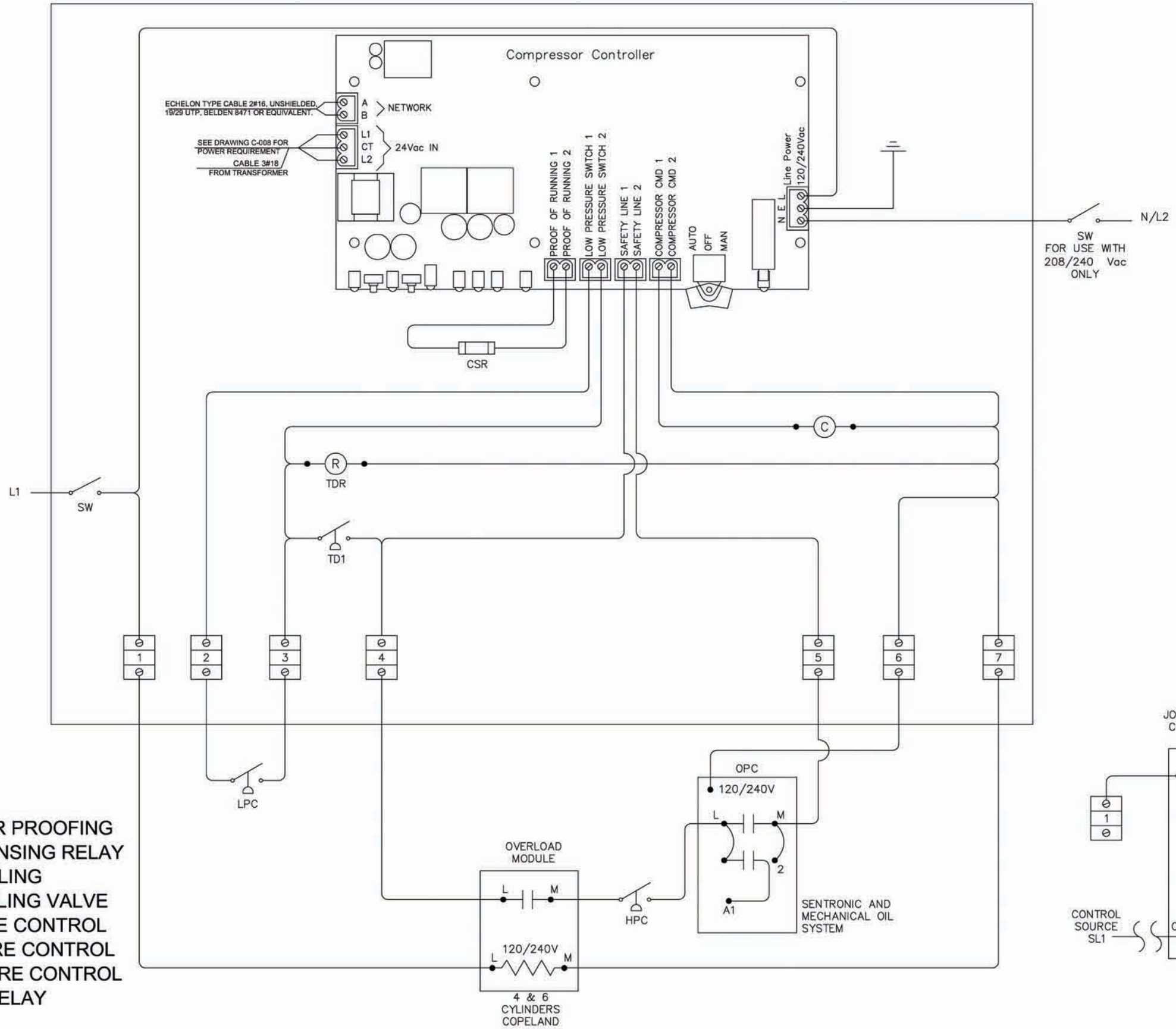

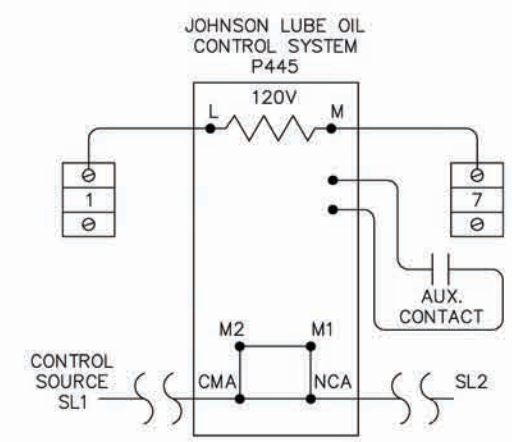

LEGEND :

C : CONTACTOR
CP : COMPRESSOR PROOFING
CSR : CURRENT SENSING RELAY
DCC : DEMAND COOLING
DCV : DEMAND COOLING VALVE
OPC : OIL PRESSURE CONTROL
LPC : LOW PRESSURE CONTROL
HPC : HIGH PRESSURE CONTROL
TDR : TIME DELAY RELAY
SW : SWITCH

DATE	DESCRIPTION	REV.
		08
		07
		06
		05
		04
--	-----	03
--	-----	02
--	-----	01
--	-----	00

SYSTEM :

REFRIGERATION

AUTOMATION / CONTROL :

MICRO THERMO TECHNOLOGIES
2584 boul. Le Corbusier
Laval, Quebec
Canada, H7S 2K8
Tel: (450) 668-3033
Fax: (450) 668-2695
e-mail : mt@microthermo.com

TITLE: COMPRESSOR CONTROLLER 120/208 Vac c/w HIGH PRESSURE, SOLID STATE MODULE & OIL PRESSURE CONTROL

PART# 9XX632F

DRAWN BY :	DESIGN BY :	APPROVED BY :	PROJECT NO :
G.Q.	L.M.	A.H.	STANDARD
SCALE :	DATE :	SHEET NO :	FILE NAME:
N.T.S	08-23-2004	A-110	COMP CTRL DIAG #8